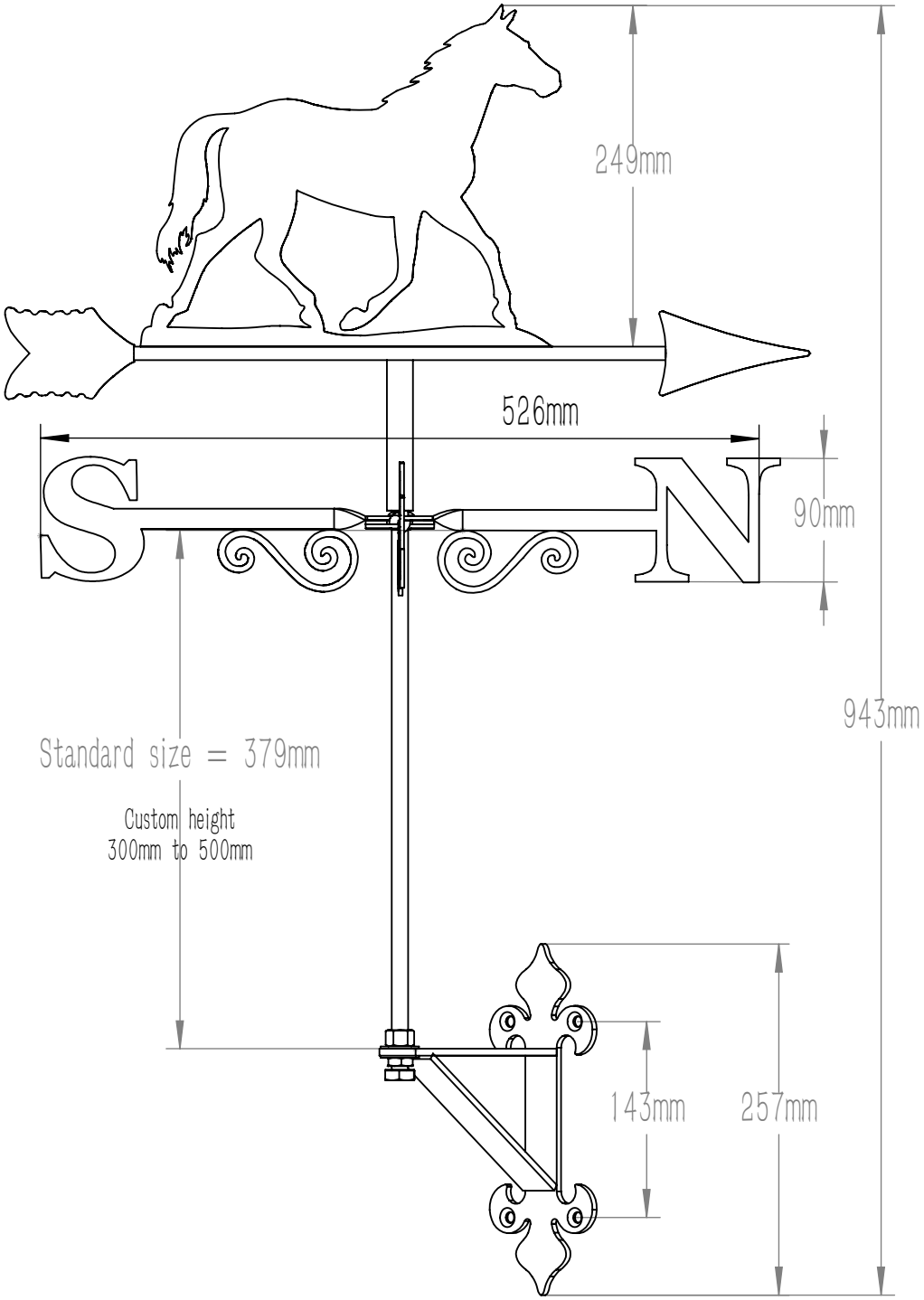

Old School Metalcraft, Firies, Kerry.
Tel: 066 9764918 Mobile: 0860853828